Current part is item (23) on diagram. Available at www.oshkoshequipment.com

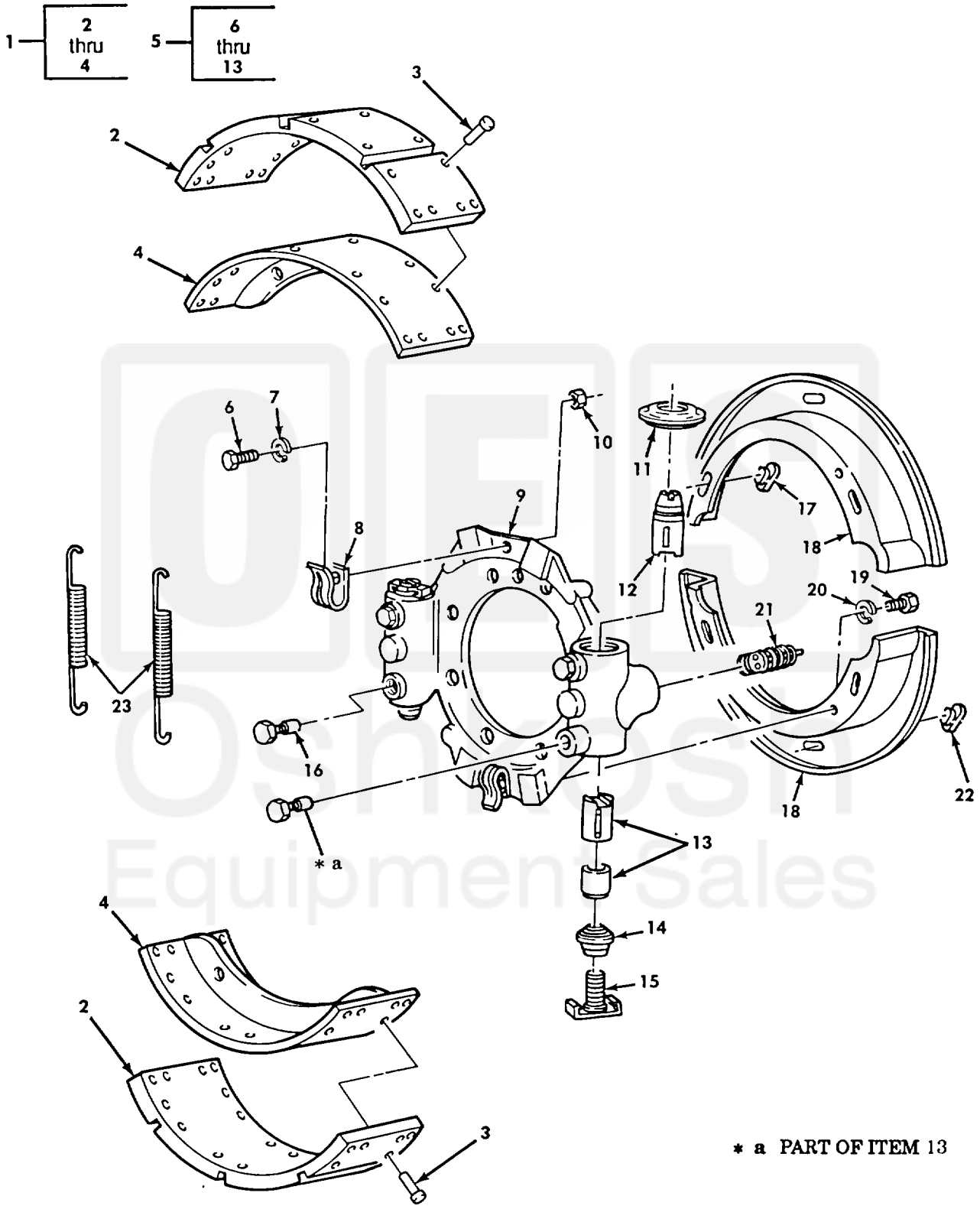

Figure 246. Rear Axle Brake and Spider Assembly.

Current part is item (23) on diagram. Available at www.oshkoshequipment.com

Current part is item (23) on diagram. Available at www.oshkoshequipment.com

(1) ITEM NO	(2) SMR CODE	(3) NSN	(4) CAGEC	(5) PART NUMBER	(6) DESCRIPTION AND USABLE ON CODES (UOC)	(7) QTY
					GROUP 1202 HAND BRAKES	
					FIG. 246 REAR AXLE BRAKE AND SPIDER ASSEMBLY	
1	PAOZZ	2530012863257	19207	5705696	PARTS KIT, BRAKE SHO QTY-4 PER SET	1
2	KFOZZ		19207	12356896	.LINING, BRAKE PART OF KIT P/N 5705695	8
3	PAOZZ	5320012906360	96906	MS16536-243	.RIVET, TUBULAR PART OF KIT P/N 5705695	96
4	KFOZZ		19207	12356897	.SHOE, BRAKE	4
5	PAOFF	2530011246530	78500	A-3211-K-2871	SPIDER ASSEMBLY FWD REAR, L.H. AND REAR REAR, R.H	2
5	PAOFF	2530011254280	78500	A-3211-D-2994	SPIDER ASSEMBLY FWD REAR, R.H. AND REAR REAR, L.H	1
6	PAFZZ	5306010623148	78500	S-146-C	.BOLT	2
7	PAFZZ	5310010632299	78500	WA-14-C	.WASHER, LOCK .	2
8	PAFZZ	5340006137784	78500	1718-D-134	.CLIP	2
9	XAFZZ	2530011346618	78500	A1-3211-K-2871	.SPIDER, BRAKE FWD REAR, L.H. AND REAR REAR, R.H	1
9	XAFZZ	2530011231229	78500	A1-3211-D-2994	.SPIDER, BRAKE FWD REAR, R.H. AND REAR REAR, L.H	1
10	PAFZZ	5310012372615	78500	N-14-C	.NUT, HEXAGON	2
11	PAFZZ	5330012929573	78500	1205-B-2004	.SEAL, ANCHOR PART OF KIT P/N 1173, 1174	2
12	PAFZZ	5315012708268	78500	2297-Y-5329	.PLUNGER, ANCHOR LEFT, PART OF KIT P/N 1173	2
12	PAFZZ	5315012708269	78500 2	297-Z-5330	.PLUNGER, ANCHOR RIGHT, PART OF KIT P/N 1174	2
13	PAFZZ	3040012804156	78500	A-3280-V-8186	.PLUNGER ASSEMBLY, ADJUSTING PART OF KIT P/N 1164	2
14	PAFZZ	5330012719347	78500	1205-C-2005	.SEAL ADJUSTER PART OF KIT P/N 1164	2
15	KFFZZ		78500	A-2297-V-5326	.BOLT ASSEMBLY, ADJUSTER PART OF KIT P/N 1164	2
16	KFFZZ		78500	A-3280-Z-8190	.GUIDE, PLUNGER PART OF KIT P/N 1173, 1174	2
17	PAOZZ	5340001811546	78500	1707-C-3	CAP-PLUG, PROTECTIVE	8
18	PAOZZ	2530010769567	78500	3236-L-2014	SHIELD, BRAKE DISK UOC:DAA, DAB, DAC, DAD, DAE, DAF, DAG, DAH, DAJ, DAK, DAL, DAW, DAX, V12, V13, V14, V15, V16, V18, V19, V20, V21, V22, V24, V25, V39	8
19	PAOZZ	5305013571656	78500	S255Z	SCREW, CAP, HEXAGON H	16
20	PAOZZ	5310010623384	78500	1229-S-513-C	WASHER, LOCK	16
21	PAOZZ	2530001179144	78500	A-2747-H-112	WEDGE ASSEMBLY	8
22	PAOZZ	2530004066785	78500	1707B	COVER, DUST	8
23	PAOZZ	5360012750545	78500	2258-S-1033	SPRING, SHOE RETURN PART OF KIT P/N 1164	2

END OF FIGURE

Current part is item (23) on diagram. Available at www.oshkoshequipment.com